SONOSAX ES64 MASTER MODULE

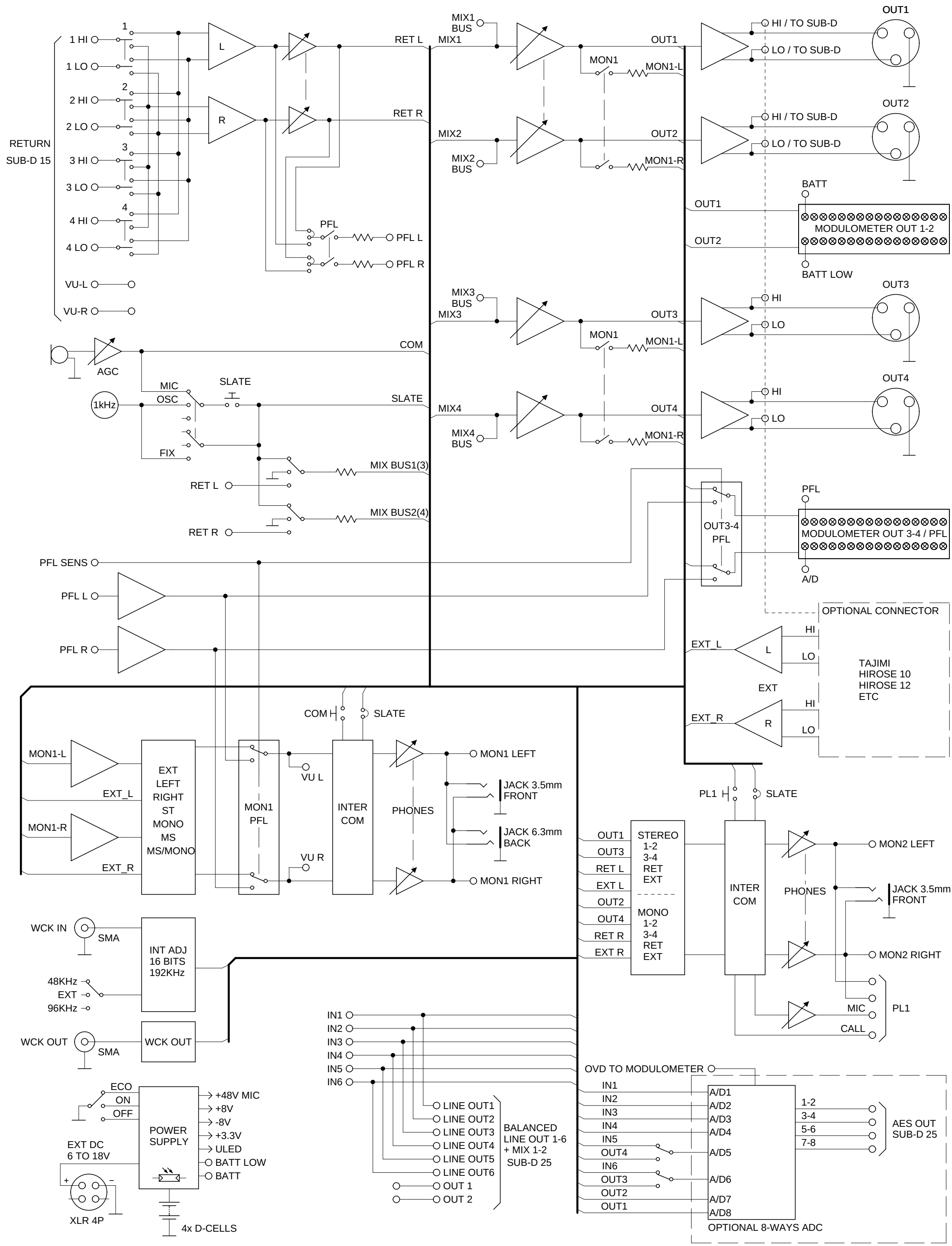

Improvement may cause change of features and specifications without notice

280808

SONOSAX SAS SA Ch de la Naz 38 CH-1052 Le Mont s/Lausanne SWITZERLAND Tel +4121 651 01 01 Fax +4121 651 01 09

Copyright 2008 © SONOSAX